CHAPTER II

REVIEW OF RELATED LITERATURE

2.1 Definition of Retaining Wall

Retaining wall is a structure that holds or retains soils behind the retaining wall. Usually, retaining walls can be built by materials like: concrete, timber, rocks or boulders. In Indonesia, many contractors mostly use poured concrete as the retaining wall.

The choice of timber as a retaining wall is quite simple since it needs less labor and cheap in terms of the price of the material, but it has a relatively short lifespan as it can decompose easily due to its function to retain soil. While the choice of stones or rocks as a retaining wall brings much aesthetics into the wall, but the rock is hard to install and it needs a lot of labor, furthermore it needs a lot of maintenance since the walls may erode and weeds may grow between the rocks' cracks. And lastly, casting concrete is a choice which brings a lot of advantages in terms of structure. Concrete is strong and it can withstand erosion as well as decomposition and also it does not budge if there is some minor consolidation. But due to its properties and its labor needed, concrete is counted as expensive even though it is cheaper than rocks.

2.2 Function and Application of Retaining Wall

Retaining wall is majorly used as a separator between soils that have different elevation. But due to modern construction and new aesthetic properties, retaining wall can increase an appeal in home's landscapes. Retaining wall's main functions are listed as below:

- Withstand active lateral earth pressure in which it may trigger landslide.
- Withstand water pressure in soils which it may trigger collapse of soil.
- Preventing lateral seepage from the condition of high earth water elevation. Retaining wall serves to dewater by cutting of flow net.

Retaining walls are necessary in geotechnical engineering. It is used to retain a huge mass of soil. Its application towards geotechnical engineering follows:

- Retaining unstable soil next to a road or railway
- Raising a section of ground with minimal land-take
- Creating an underground space
- Creating an excavation space for installing pipes and cables

2.3 Classifications of Retaining Wall

Retaining walls are grouped into four classifications:

1. Gravity retaining walls

Gravity retaining walls are built from concrete or stone masonry. The walls are stable due to their own weight and the weight of the soil resting on the wall. It is not recommended to build high walls with this method as it is not economical.

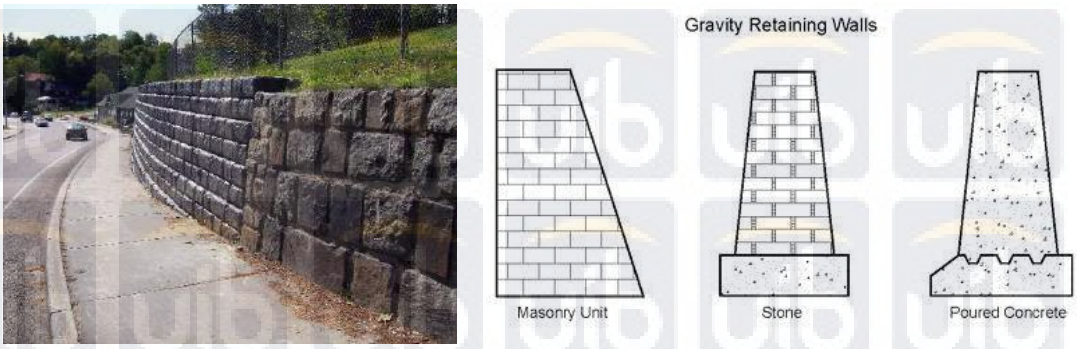

Figure 2.1 Gravity Retaining Wall

2. Semi-gravity retaining walls

Semi-gravity retaining walls are similar to gravity retaining walls. But in this method, a small amount of steel is being used as to reinforce the strength of the wall. Hence, with the addition of the steel, the size of the wall is reduced.

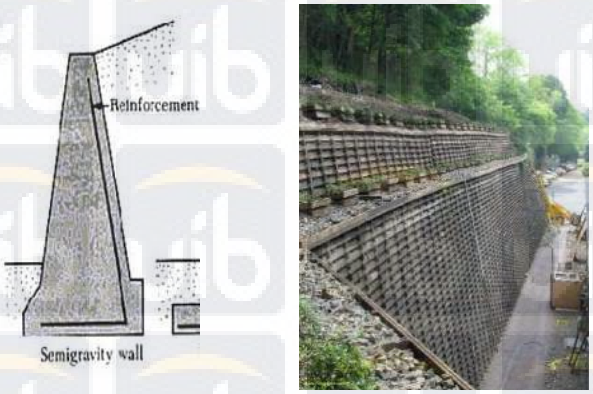

Figure 2.2 Semi-Gravity Retaining Wall

3. Cantilever retaining walls

Cantilever retaining walls are usually made up of concrete with steel reinforcements. The difference between semi-gravity and cantilever retaining walls is the formation of the steel reinforcement. Semi-gravity retaining walls are being design as a whole without any cantilever slab; while cantilever retaining walls has a base slab with steel reinforcements in it. This type of retaining wall is counted as economical with the maximum height of 8 meters. And because of its

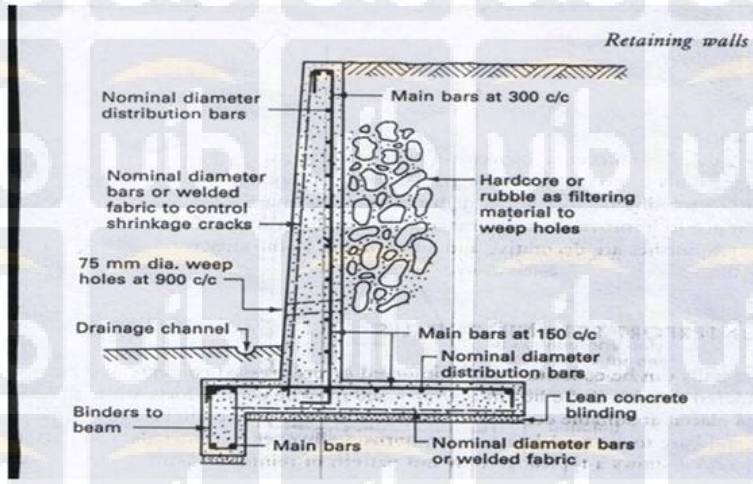

properties, cantilever retaining walls may be precast or casted on site.

Figure 2.3 Cantilever Retaining Wall

4. Counterfort retaining walls

Counterfort retaining walls are similar to cantilever walls as it is made up of concrete and steel (reinforced concrete). In this case, the cantilever slab is being tied by the so-called counterforts. The reason of the counterforts is to reduce shear and bending moments acting towards the structure. It is counted economical if the wall is built by the maximum height of 6 meters.

Figure 2.4 Counterfort Retaining Wall

5. Buttress walls

Buttress walls are similar to counterfort retaining walls. The only difference between these two walls are the location of the cantilever slab and its counterfort. For counterfort retaining walls, the slab and its counterfort are located behind the wall, buried by the soils. While for the buttress walls, the slab and its counterfort are located in front of the wall, being visible in the eye by people. The stability of this wall is acquired from the weight of the soil above the cantilever slab and the weight of the wall on its own. Buttress walls are much cheaper if it is built above 7 meters.

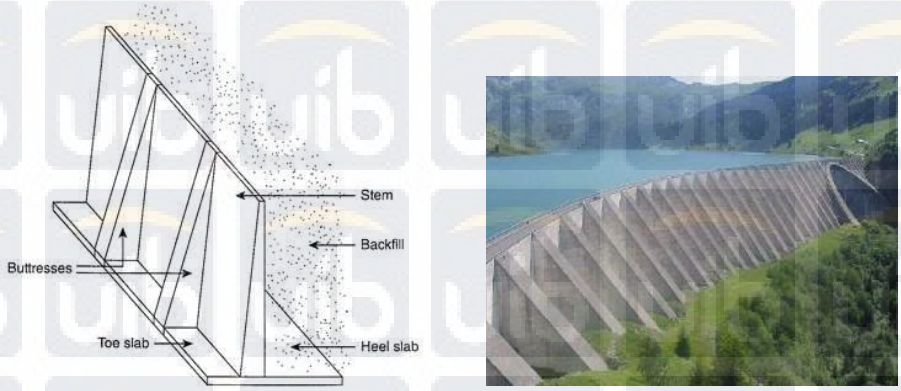

Figure 2.5 Buttress Wall

2.4 Lateral Earth Pressure

In order to design a retaining structure such as retaining walls, engineers must know what kind of forces are acted towards the structure. Engineers are supposed to analyze the lateral forces that act between the retaining structure with the mass of soil retained. The lateral forces acted are called lateral earth pressure.

Lateral earth pressure behind the retaining wall has a lot of variable to consider. Some factors to consider are: the material of the foundation, water content in soil, soil being landfilled, pressure from the soil's surface, friction provided from the retaining wall, etc. With these factors, we could estimate and design the size, materials, and the strength needed to build the retaining wall.

There are three types of lateral earth pressure:

1. At-rest earth pressure
2. Active earth pressure
3. Passive earth pressure

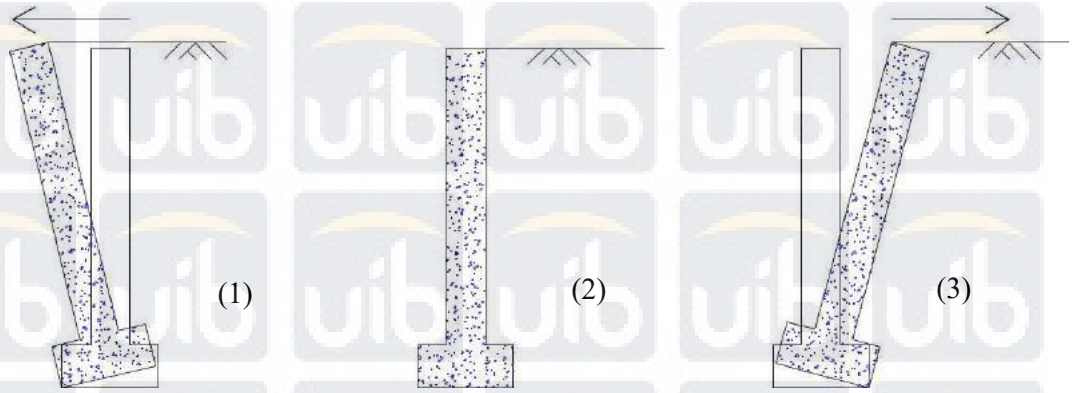

Figure 2.6 The forces reacting towards the wall with (1) as Active Earth Pressure; (2) as At-rest Earth Pressure; (3) as Passive Earth Pressure

Height is one of the factors that affects lateral earth pressure. The table below shows the correlation between the height of the wall, the type of soil, and the displacement from lateral earth pressure applied towards the wall.

Type of Soil	Active Earth Pressure
Solid Sand	0,001H– 0,002H
Loose Sand	0,002H– 0,004H
Hard Clay Soil	0,01H– 0,02H
Soft Clay Soil	0,02H– 0,05H

Table 2.1 Relationship between type of soil, height and the displacement of wall for active earth pressure

Type of Soil	Passive Earth Pressure
Solid Sand	0,005H
Loose Sand	0,01H
Hard Clay Soil	0,01H
Soft Clay Soil	0,05H

Table 2.2 Relationship between type of soil, height and the displacement of wall for passive earth pressure

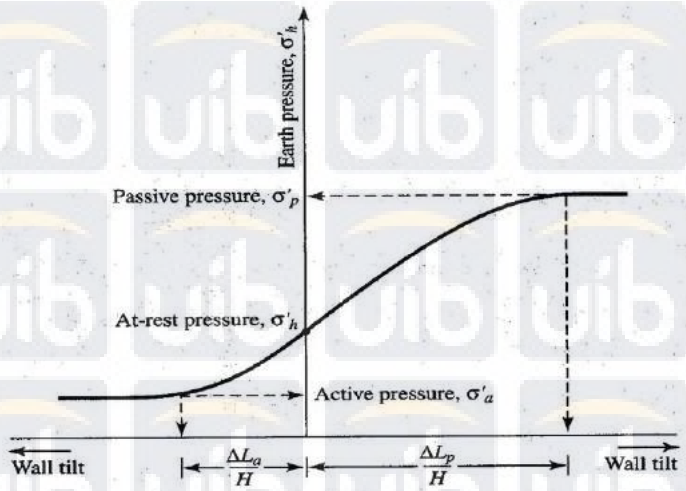

Figure 2.7 The variation of the magnitude of lateral earth pressure with wall tilt

Scientists and engineers have studied the earth pressure, and came up with three theories that may help during the design and construction of the retaining wall.

2.4.1 Earth Pressure at Rest

Earth pressure at rest means that the soil itself is at the state of neutral and receiving only its own weight. Hence, consolidation of soil happens due to the vertical pressure acting towards the soil itself. The consolidation affects the retaining wall by contributing a change in the lateral earth pressure in which is retained by the soils nearby. Due to a long time, the consolidation and horizontal and vertical creep is equal to 0. Because of lack of displacement from both horizontal and vertical earth pressure, the soil achieved static condition with earth pressure at rest.

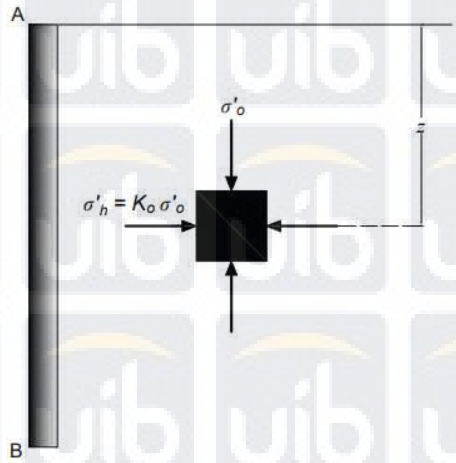

Figure 2.8 Earth pressure at rest

From the figure above, the mass of soil is being retained by a frictionless wall AB that extends to an infinite depth. To the case of a soil element being located by the depth of z, it is given that

$$\sigma'_o = \sigma_o = \gamma z$$

and

$$\sigma'_h = \sigma_h = K_o \gamma z$$

in which γ = unit weight of soil, σ_o = total vertical pressure and σ_h = total horizontal pressure. Shear stresses are not present on both horizontal and vertical planes.

The ratio of the effective horizontal stress to the effective vertical stress is called the coefficient of earth pressure at rest, K_o, or

$$K_o = \frac{\sigma'_h}{\sigma'_o}$$

With $\sigma'_o = \gamma z$, we could find σ'_h with the following equation

$$\sigma'_h = K_o(\gamma z)$$

For coarse-grained soils, the coefficient of earth pressure at rest can be estimated by using the empirical relationship (Jaky, 1944)

$$K_o = 1 - \sin \phi'$$

where ϕ' = drained friction angle.

For fine-graded, normally consolidated soils, Massarsch (1979) suggested the following equation

$$K_o = 0.44 + 0.42 \left[\frac{PI\ (\%)}{100}\right]$$

where PI = Plasticity Index.

For over-consolidated clays. The coefficient of earth pressure at rest can be approximated as

$$K_{o(over-consolida\quad)} = K_{o(normally\ consolidated)} \sqrt{OCR}$$

where OCR = Over-consolidation Ratio.

The over-consolidation ratio is defined as

$$OCR = \frac{Pre - consolidation\ pressure, \sigma'_c}{Present\ effective\ overburden\ pressure, \sigma'_o}$$

Soil Type	OCR = 1	OCR = 2	OCR = 5	OCR = 10
Loose Sand	0,50	0,65	1,10	1,50
Medium Dense Sand	0,40	0,60	1,05	1,55
Dense Sand	0,35	0,55	1,00	1,50
Silt	0,50	0,70	1,10	1,60
Lean Clay, CL	0,60	0,80	1,20	1,65
High Plasticity Clay, CH	0,65	0,80	1,10	1,40

Table 2.3 The typical value of K_o

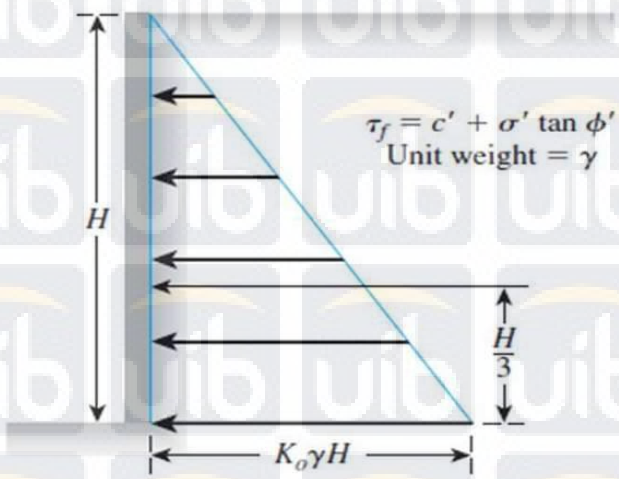

Figure 2.9 Distribution of lateral earth pressure at-rest on a wall

Figure 2.9 shows the distribution of lateral earth pressure at-rest on a wall with a height of H retaining a dry soil having a unit weight of γ. The total force per unit length of wall P_o is equal to the area of the pressure diagram

$$P_o = \frac{1}{2} K_o \gamma H^2$$

When groundwater exists within the soil retained behind the wall, other measures were used to calculate the earth pressure at-rest.

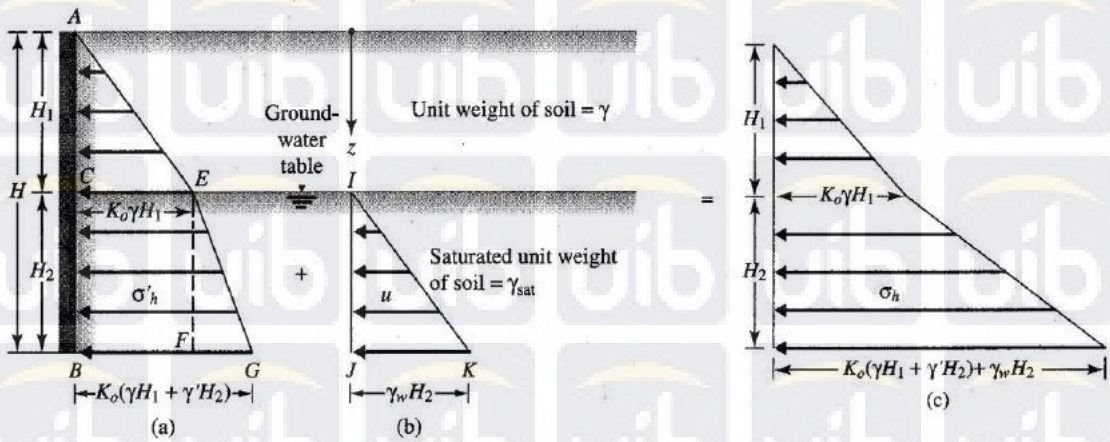

Figure 2.10 Distribution of lateral earth pressure at-rest for partially submerged soil

Figure 2.10a shows the distribution of lateral earth pressure at-rest on a wall with a height of H_1 retaining a dry soil having a unit weight of γ plus wet soil below the groundwater table with a height of H_2 having a unit weight of γ'. Figure 2.10b shows the distribution of lateral earth pressure at-rest on a wall with a height of H_2 retaining groundwater having a unit weight of γ_w. Figure 2.10c shows the distributed lateral earth pressure at-rest applied towards the wall with the cases being added up.

In order to calculate the total lateral earth pressure at-rest in Figure 2.10c, we need to calculate the area of Figure 2.10a and Figure 2.10b.

For Figure 2.10a, there are three segments that we need to calculate: segment ACE, segment CEFB and segment EFG. The following formula calculates the effective vertical pressure of $z \geq H_1$

$$\sigma'_o = \gamma H_1 + \gamma'(z - H_1)$$

where $\gamma' = \gamma_{sat} - \gamma_w$ = effective unit weight of soil. Hence, the formula for effective lateral pressure at rest is

$$\sigma'_h = K_o \sigma'_o = K_o[\gamma H_1 + \gamma'(z - H_1)]$$

The lateral pressure from pore water from the Figure 2.10b is descripted in the following formula

$$u = \gamma_w (z - H_1)$$

The total lateral earth pressure from earth and water at any depth where $z \geq H_1$ is expressed in the following formula

$$\sigma_h = \sigma_h + u = K_o[\gamma H_1 + \gamma'(z - H_1)] + \gamma_w (z - H_1)$$

To conclude the lateral earth pressure applied towards the wall with the pressure diagrams of Figure 2.10a and Figure 2.10b, the force per unit length of the wall is equal to

$$P_o = \frac{1}{2} K_o \gamma H_1^2 + K_o \gamma H_1 H_2 + \frac{1}{2}(K_o \gamma' + \gamma_w) H_2^2$$

Area ACE Area CEFB Area EFG & IJK

or

$$P_o = \frac{1}{2}K_o[\gamma H_1^2 + 2\gamma H_1 H_2 + \gamma' H_2^2] + \frac{1}{2}\gamma_w H_2^2$$

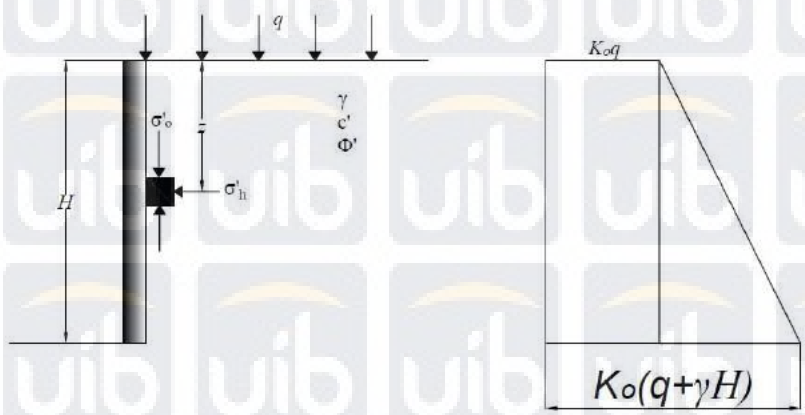

Figure 2.11 Distribution of lateral earth pressure at-rest for distributed load

If there is a distributed load on top of the retained soil like in Figure 2.11, it is counted as well into the formula. The pressure diagram of distributed load is in form of a rectangle. Hence, the force per unit length of the wall is equal to

$$P_o = K_o qH + \frac{1}{2}K_o \gamma H$$

2.4.2 Rankine's Theory of Active and Passive Earth Pressures

The parameters of using Rankine's Theory of Earth Pressures are:

1. There is no friction between the retaining wall with the soil

2. Lateral earth pressure only happens when the retaining wall stands by the angle of 90°
3. The landslide of the retained soil is due to the friction of the soil from the angle of friction of soil.
4. Lateral earth pressure is linear towards the resultant and the depth of the pressure which is one-third of the height of the wall measured from the base of the wall.
5. Resultant force varies on the surface of the retained soil.

2.4.2.1 Rankine's Theory of Active Earth Pressure

Rankine's theory mentioned that active earth pressure is pushing away the wall from the soil.

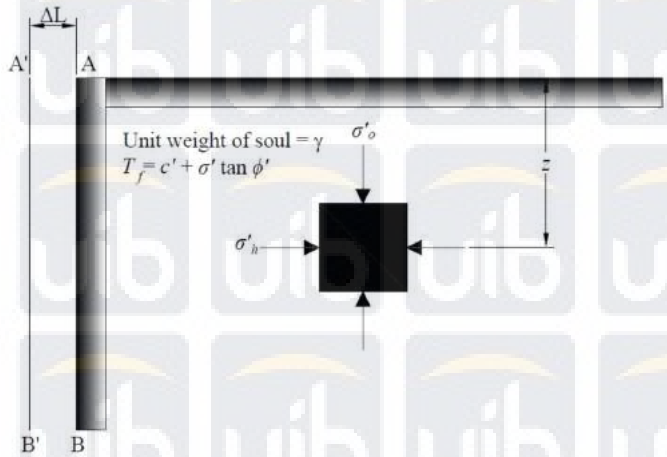

(a)

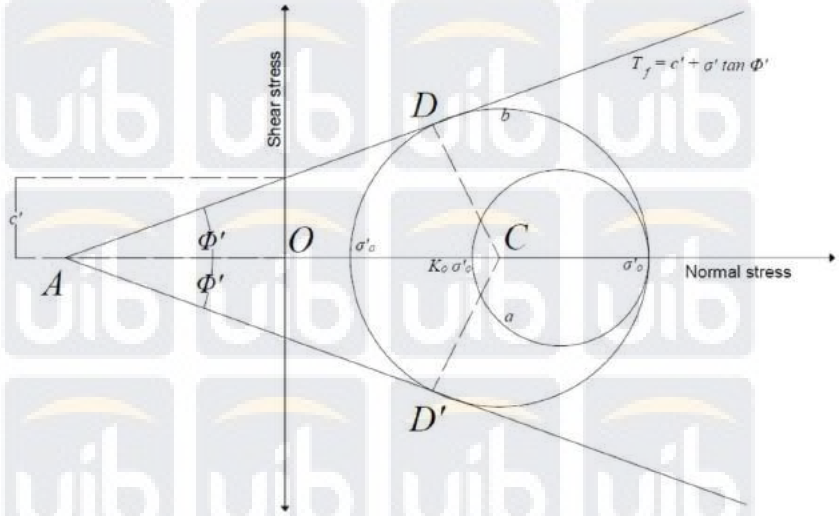

(b)

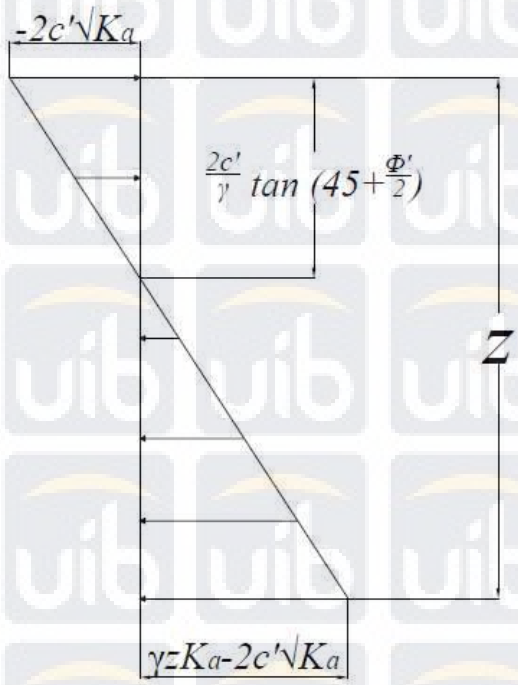

(c)

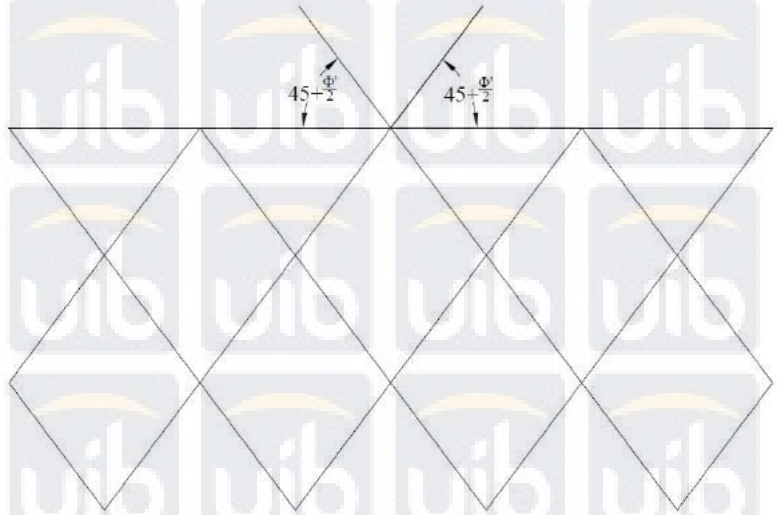

(d)

Figure 2.12 Rankine's active earth pressure

As we can see from Figure 2.12a, the state of the retaining wall is represented with AB with A'B' as its state after being pushed away from the active force. Shear stress is defined as

$$T_f = c' + \sigma_o \tan \phi'$$

Where T_f = shear stress; c' = soil cohesion

Figure 2.12b shows Mohr's circle of the forces acted out against the wall. Circle a shows the stress condition in the soil element, though wall AB in this case is moving away from the soil mass gradually, so the horizontal effective principal stress will decrease. Circle b shows the state of plastic equilibrium. Failure will happen on the soil if the stress condition of the soil element is on circle b.

From Figure 2.12b, we can derive the formula of σ'_a from the angle of ϕ, which we have

$$\sigma'_a = \gamma z \tan^2\left(45 - \frac{\phi'}{2}\right) - 2c' \tan\left(45 - \frac{\phi'}{2}\right)$$

From Figure 2.12c, we can have the variation of σ'_a with depth of z. With the condition of cohesionless soils, $c' = 0$ and

$$\sigma'_a = \sigma'_o \tan^2\left(45 - \frac{\phi'}{2}\right)$$

The coefficient of Rankine's active earth pressure is defined as

$$K_a = \frac{\sigma'_a}{\sigma'_o} = \tan^2\left(45 - \frac{\phi'}{2}\right)$$

We can define the total force working on the wall according to the area of the pressure diagram of Figure 2.12c, which can be defined as

$$P_a = \frac{1}{2} K_a \gamma z^2 - 2c'\sqrt{K_a} z$$

With the case of $c' = 0$ according to the Rankine's theory, we can define the formula of total force per unit length of wall as

$$P_a = \frac{1}{2} K_a \gamma z^2$$

with z as the height of the wall.

2.4.2.2 Rankine's Theory of Passive Earth Pressure

Rankine's theory mentioned that passive earth pressure contributes on the wall's stability towards the soil.

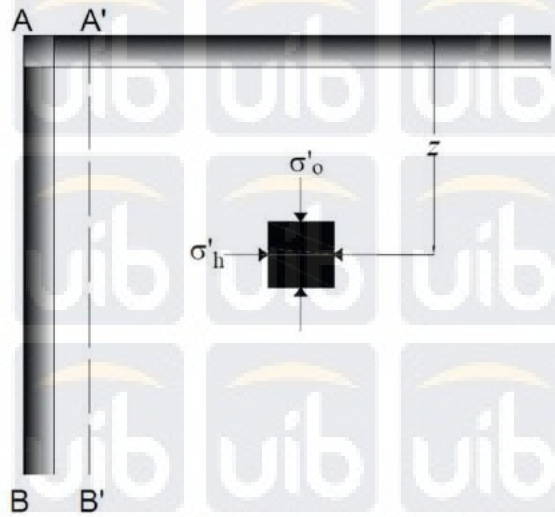

(a)

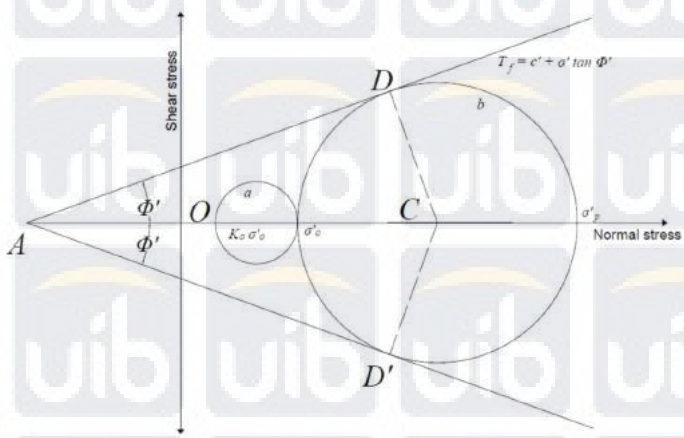

(b)

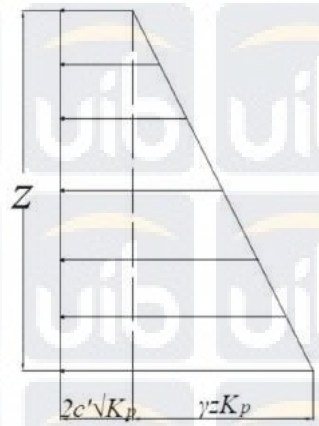

(c)

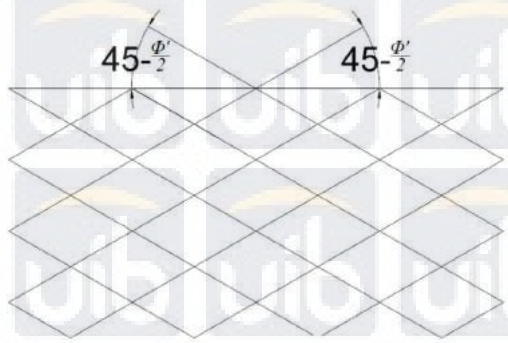

(d)

Figure 2.13 Rankine's passive earth pressure

Figure 2.13b shows the Mohr's circle with the condition of the wall is being pushed into the soil's mass. Passive force is achieved when failure of the soil occurred with stress condition of the wall has reached Mohr's circle b. From here, we can express Rankine's passive earth pressure with the formula below

$$\sigma'_p = \sigma'_a \tan^2\left(45 + \frac{\phi'}{2}\right) + 2c' \tan\left(45 + \frac{\phi'}{2}\right)$$

$$= \gamma z \tan^2\left(45 + \frac{\phi'}{2}\right) + 2c' \tan\left(45 + \frac{\phi'}{2}\right)$$

With the condition of the soil being cohesionless ($c' = 0$), Figure 2.13c shows the variation of the passive pressure with a depth of z. From Figure 2.13c, we can acquire

$$\frac{\sigma'_p}{\sigma'_o} = K_P = \tan^2\left(45 + \frac{\phi'}{2}\right)$$

K_p = coefficient of Rankine's passive earth pressure.

We can define the total force working on the wall according to the area of the pressure diagram of Figure 2.13c, which can be defined as

$$P_P = \frac{1}{2} K_P \gamma z^2 - 2c'\sqrt{K_P} z$$

With the case of $c' = 0$ according to the Rankine's theory, we can define the formula of total force per unit length of wall as

$$P_P = \frac{1}{2} K_P \gamma z^2$$

with z as the height of the wall.

The ratio of the coefficient of lateral earth pressure can be predicted with the table below:

Non-Cohesive Soil	Cohesive Soil
K_p	K_p
3 - 14	1 - 2
K_0	K_0
0,4 – 0,6	0,4 – 0,8
K_a	K_a
0,22 – 0,33	0,5 – 1,0

Table 2.4 Ratio of coefficient of lateral earth pressure

2.4.3 Coulomb's Theory of Active and Passive Earth Pressures

Coulomb (1776) presented a theory in which:

1. Friction and adhesion are present between the wall and the soil retained hence the value must be calculated.
2. Lateral earth pressure is not limited to vertical wall.
3. Landslides from landfills is assumed as planar or lying in a plane
4. Lateral pressure of the retaining wall is linear towards the depth of the soil and the resultant force that is acting on one-third of the retaining wall from the base of the wall.

2.4.3.1 Coulomb's Theory of Active Earth Pressure

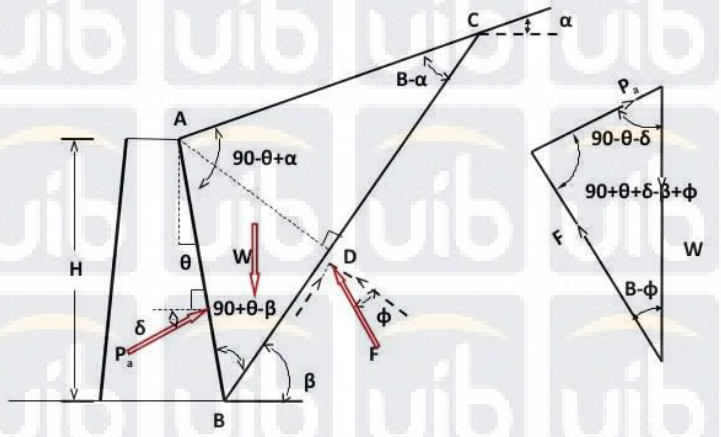

(a) (b)

Figure 2.14 Coulomb's active earth pressure

Coulomb mentioned that the friction between the soil and the wall is considered into the formula of calculating the earth pressure, hence the interaction of soil and wall can be counted as one of the factors considered. Figure 2.14 describes the concept of the Coulomb's active earth pressure theory in which Figure 2.14a is about the trial failure wedge and Figure 2.14b is about the force polygon.

Figure 2.14a describes the forces involved on the stability consideration of the probable failure wedge of triangle ABC. There are 3 forces involved, which are:

1. W, the effective weight of the soil wedge known
2. F, the resultant force of both normal and shear forces acting on the surface of failure BC. The direction of the

resultant force is inclined to the normal drawn to the plane of BC with an angle of ϕ'.

3. P_a, the active force per unit length of the wall. The direction of the active force is inclined to the normal drawn to the face of the wall with an angle of δ'. δ' is the angle of friction between the wall and the soil.

From Figure 2.14b, we can conclude the equation of the Coulomb's active earth pressure with law of sines. We acquire the formula of Coulomb's active earth pressure as

$$P_a = \frac{1}{2} K_a \gamma H^2$$

In which we acquire K_a as

$$K_a = \frac{\sin^2(\phi' - \theta)}{\cos^2\theta \cos(\delta' + \theta)\left[1 + \sqrt{\frac{\sin(\delta' + \phi')\sin(\phi' - \alpha)}{\cos(\delta' + \theta)\cos(\theta - \alpha)}}\right]^2}$$

2.4.3.2 Coulomb's Theory of Passive Earth Pressure

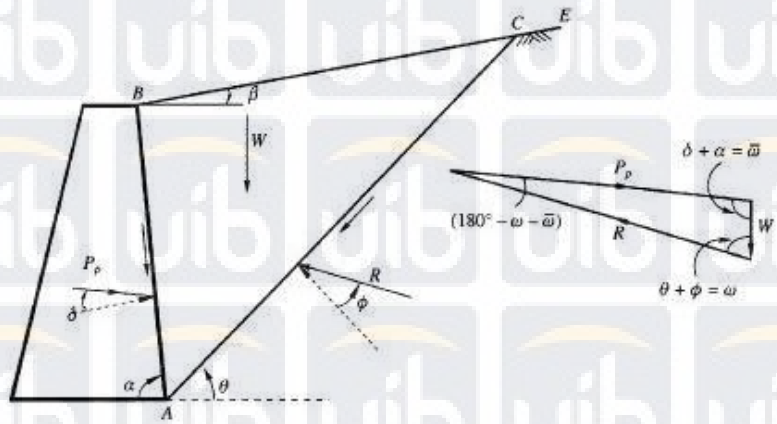

(a) (b)

Figure 2.15 Coulomb's passive earth pressure

Coulomb's passive earth pressure is presented in Figure 2.15. We could define the formula of Coulomb's passive earth pressure as

$$P_P = \frac{1}{2} K_P \gamma H^2$$

In which we acquire K_p as

$$K_p = \frac{\cos^2(\phi' + \theta)}{\cos^2\theta \cos(\delta' - \theta)\left[1 - \sqrt{\frac{\sin(\phi' - \delta')\sin(\phi' + \alpha)}{\cos(\delta' - \theta)\cos(\alpha - \theta)}}\right]^2}$$

2.5 Lateral Pressure on Retaining Walls from Surcharges – Based on Theory of Elasticity

Other than the active and passive forces of the soils, we also need to consider the fact that lateral pressure from surcharges affects the forces acting on towards the retaining wall. Surcharges are external pressures of the soil, usually from either human or nature activities. Usually human activities are considered as distributed load. Other than distributed load, there are 3 types of surcharge load such as:

1. Point-Load Surcharge
2. Line-Load Surcharge
3. Strip-Load Surcharge

Due to the different surcharge loads, we must use the Theory of Elasticity in order to acquire the lateral pressure on the retaining wall caused by the given surcharge load.

2.5.1 Point-Load Surcharge

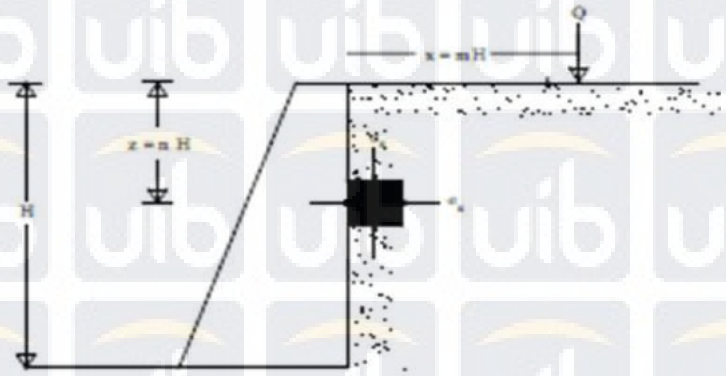

Figure 2.16 Lateral pressure on a retaining wall due to a point load

From the investigations made by Gerber (1929) and Spangler (1938) on the formula of horizontal stress with large-scaled tests, we can conclude the lateral pressure from point-load surcharge with the conditions as

For m > 0,4

$$\sigma'_h = \frac{1{,}77Q}{H^2}\frac{m^2n^2}{(m^2+n^2)^3}$$

For m ≤ 0,4

$$\sigma'_h = \frac{0{,}28Q}{H^2}\frac{n^2}{(0{,}16+n^2)^3}$$

2.5.2 Line-Load Surcharge

Figure 2.17 Lateral pressure on a retaining wall due to a line load

Figure 2.17 shows the effect of line-load surcharge placed parallel to the crest of the surface of soil. The effect, which is the distribution of lateral pressure, of line-load surcharge can be represented with the formulas with the condition of

For m > 0,4

$$\sigma'_h = \frac{4q}{\pi H}\frac{m^2n}{(m^2+n^2)^2}$$

For m ≤ 0,4

$$\sigma'_h = \frac{0{,}203q}{H}\frac{n}{(0{,}16+n^2)^2}$$

2.5.3 Strip-Load Surcharge

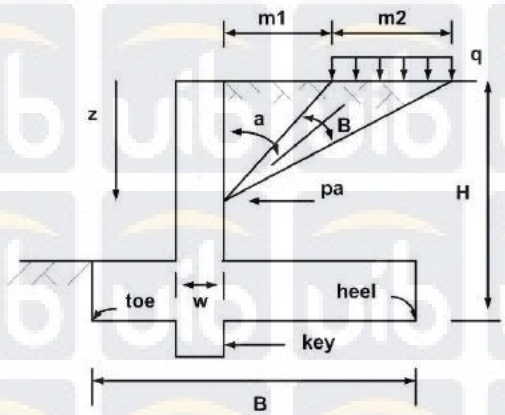

Figure 2.18 Lateral pressure on a retaining wall due to a strip load

Figure 2.18 explains the strip-load surcharge with a load of q per unit area located at the distance of m1 from the wall of height H. With the angles of α (a in Figure 2.17) and β (b as in the angle formed from the normal of the start of the distributed load until the end of the distributed load in Figure 2.17), we can conclude the equation of the lateral pressure with the modification from the theory of elasticity as

$$\sigma'_h = \frac{2q}{H}(\beta - \sin\beta\cos 2\alpha)$$

As we can see from Figure 2.17, there is the distribution of the lateral pressure with the depth of force P per unit length of the wall. Hence, in order

to obtain P, we will use the formula of the lateral pressure from strip-load surcharge by having it integrated with the limits of z from 0 to H. Jarquio (1981) had concluded the formula of P as

$$P = \frac{q}{90}\left[H\left(\tan^{-1}\left(\frac{m_1}{H}\right) - \tan^{-1}\left(\frac{m_1 + m_2}{H}\right)\right)\right]$$

2.6 Designing Retaining Walls

An engineer must consider some points in order to build a retaining wall. There are some steps that an engineer must do to consider the design of the retaining wall. The steps are:

1. Proportioning, in which an engineer will assume some of the dimensions with the agenda of check trial sections for stability.
2. Checking the overturning about the toe of the wall
3. Checking the sliding failure along the base of the wall
4. Checking the bearing capacity failure of the base of the wall
5. Checking the settlement of the wall
6. Checking the overall stability of the wall

2.6.1 Proportioning Retaining Walls

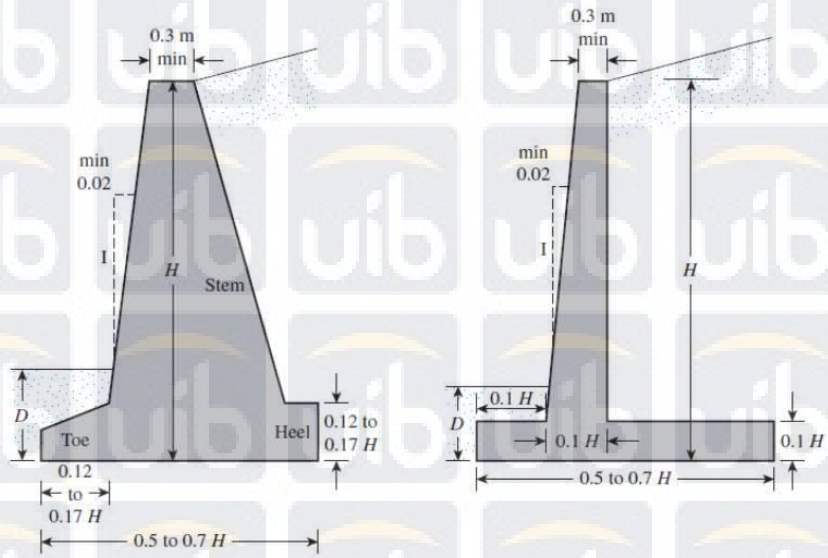

(a) (b)

Figure 2.19 The approximation of dimensions for (a) gravity wall and (b) cantilever wall

From Figure 2.19 we can see the estimation being made for the design of retaining wall. Note that the depth D must be a minimum of 0,6 m. Basically trial and error, an engineer must check the stability and redesign if the results were undesirable. Engineers must acquire the safest proportion in order to maximize the usage of the retaining wall.

2.6.2 Check for Overturning

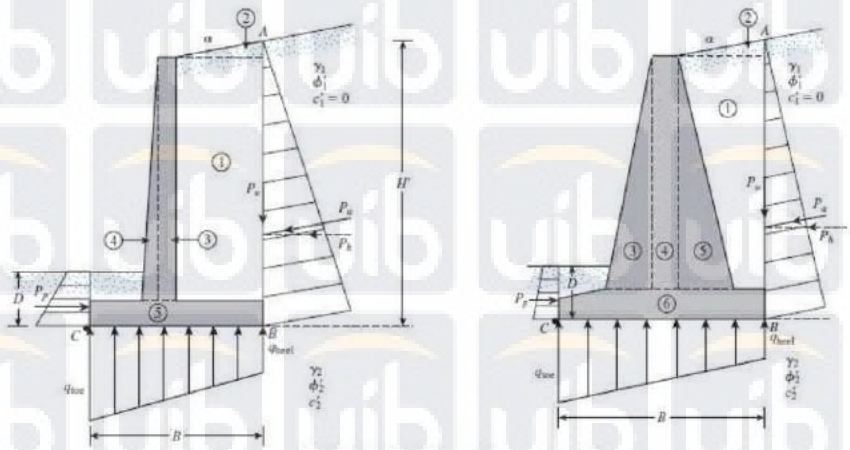

Figure 2.20 Checking overturning of the wall, assuming that Rankine pressure is valid

To the extent of checking the overturning of the toe of the wall, we can calculate the safety factor on point C in Figure 2.20 with the formula

$$FS_{(overturning)} = \frac{\Sigma M_R}{\Sigma M_O}$$

Where ΣM_O = sum of the moments tending to overturn about point C; ΣM_R = sum of the moments tending to resist overturning about point C.

We can calculate ΣM_O with adding the moment of the active force of Rankine's theory about the point C.

$$\Sigma M_O = \Sigma P_a \times moment\ arm\ measured\ from\ C\ (y)$$

As for retaining walls that holds sloping backfill, we calculate ΣM_O with the formula

$$\Sigma M_O = P_h\left(\frac{H'}{3}\right) = P_a \cos\alpha\left(\frac{H'}{3}\right)$$

While calculating ΣM_R requires making a table for calculating the weight of the wall.

Section (1)	Area (2)	Weight/unit length of wall (3)	Moment arm measured from C (4)	Moment about C (5)
1	A_1	$W_1 = \gamma_1 \times A_1$	X_1	M_1
2	A_2	$W_2 = \gamma_1 \times A_2$	X_2	M_2
3	A_3	$W_3 = \gamma_c \times A_3$	X_3	M_3
4	A_4	$W_4 = \gamma_c \times A_4$	X_4	M_4
5	A_5	$W_5 = \gamma_c \times A_5$	X_5	M_5
6	A_6	$W_6 = \gamma_c \times A_6$	X_6	M_6
		P_v	B	M_v
		ΣV		ΣM_R

(*Note:* γ_l = unit weight of backfill
γ_c = unit weight of concrete)

Table 2.5 Procedure for calculating ΣM_R

The safety factor must be more than 1,5.

2.6.3 Check for Sliding along the Base

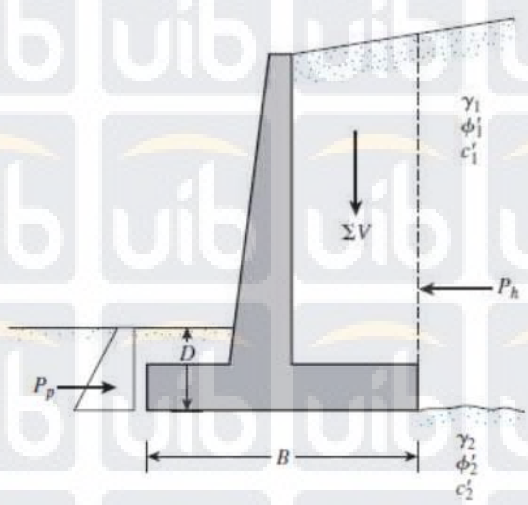

Figure 2.21 Checking sliding of the base of the wall

The formula of checking the sliding along the base of the wall can be expressed as

$$FS_{(sliding)} = \frac{\Sigma F_R}{\Sigma F_D}$$

Where ΣF_R = sum of the horizontal resisting forces; ΣF_D = sum of the horizontal driving forces.

In order to calculate ΣF_R, we will use the following formula

$$\Sigma F_R = \mathrm{F}\,\Sigma M_R + P_P = \tan\phi\,\Sigma M_R + P_P$$

which P_p is calculated with Rankine's passive earth pressure formula.

As for retaining walls withholding sloping backfill may use the following formula

$$\Sigma F_R = (\Sigma V)\tan\phi'_2 + Bc'_2 + P_P$$

While ΣF_D can be calculated with the formula

$$\Sigma F_D = \Sigma Pa$$

Which P_a is calculated with Rankine's active earth pressure formula.

As for retaining walls withholding sloping backfill may use the following formula

$$\Sigma F_D = P_a \cos\alpha$$

The safety factor must be more than 1,5.

2.6.4 Check for Bearing Capacity Failure

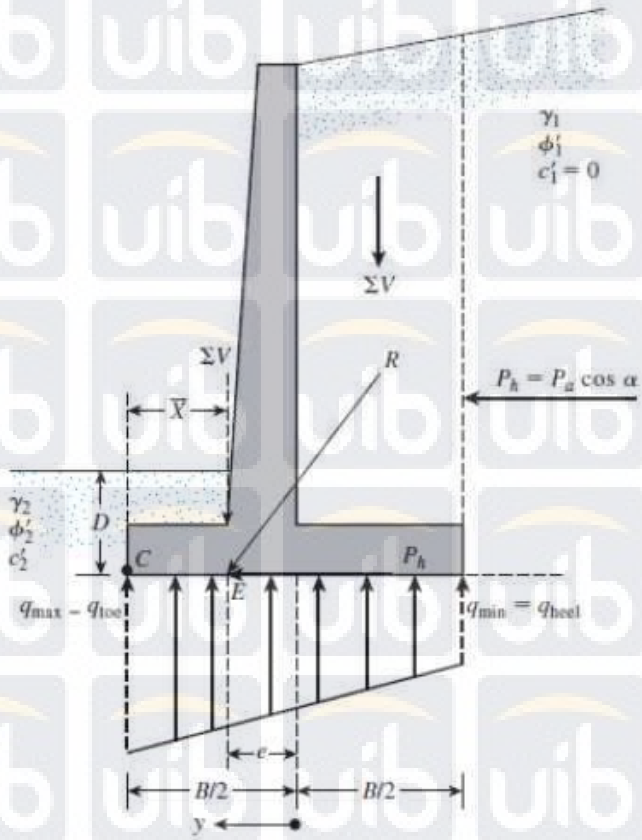

Figure 2.22 Checking bearing capacity failure of the wall

The formula of checking the bearing capacity failure is

$$FS_{(bearing\ capacity)} = \frac{q_u}{q_{max}}$$

To acquire q_u, the following formula is needed

$$q_u = q \times N_q + \frac{1}{2} B\gamma N_\gamma$$

Which q = distributed lateral load on the surface of soil; B = breadth of the base of the wall; γ = density of soil

N_q and N_γ will be acquired from Terzaghi's Bearing Capacity Theory in which can be defined into the table below

Φ	Nc	Nq	Nγ	Nc'	Nq'	Nγ'
0	5.7	1.0	0.0	5.7	1	0
5	7.3	1.6	0.5	6.7	1.4	0.2
10	9.6	2.7	1.2	8	1.9	0.5
15	12.9	4.4	2.5	9.7	2.7	0.9
20	17.7	7.4	5.0	11.8	3.9	1.7
25	25.1	12.7	9.7	14.8	5.6	3.2
30	37.2	22.5	19.7	19	8.3	5.7
34	52.6	36.5	35.0	23.7	11.7	9
35	57.8	41.4	42.4	25.2	12.6	10.1
40	95.7	81.3	100.4	34.9	20.5	18.8
45	172.3	173.3	297.5	51.2	35.1	37.7
48	258.3	287.9	780.1	66.8	50.5	60.4
50	347.6	415.1	1153.2	81.3	65.6	87.1

Table 2.6 Values of Terzaghi's bearing capacity

As for sloping backfill, q_u can be calculated with the following formula

$$q_u = c'_2 N_c F_{cd} F_{ci} + q N_q F_{qd} F_{qi} + \frac{1}{2}\gamma_2 B' N_\gamma F_{\gamma d} F_{\gamma i}$$

Where

$$q = \gamma_2 D$$

$$B' = B - 2e$$

$$F_{cd} = 1 + 0{,}4\frac{D}{B'}$$

$$F_{qd} = 1 + 2\tan\phi'_2\left(1 - \sin\phi'_2\right)^2 \frac{D}{B'}$$

$$F_{\gamma d} = 1$$

$$F_{ci} = F_{qi} = \left(1 - \frac{\psi^\circ}{90^\circ}\right)^2$$

$$F_{\gamma i} = \left(1 - \frac{\psi^\circ}{\phi'_2{}^\circ}\right)^2$$

$$\psi^\circ = \tan^{-1}\left(\frac{P_a \cos\alpha}{\Sigma V}\right)$$

In order to obtain q_{max}, we will use the formula

$$q_{max} = \frac{\Sigma M_R}{B} + \frac{1}{12B}$$

As for sloping backfill, we will use the formula

$$q_{max} = \frac{\Sigma V}{B}\left(1 + \frac{6e}{B}\right)$$

The safety factor must be more than 3.

2.6.5 Settling the Design of the Retaining Wall with Concrete

With concrete as the main material for the retaining wall, the design of the retaining wall must be calculated in terms of the strength of the concrete. Concrete must be strong enough to withstand the maximum moment working towards the concrete wall. Hence, with the given dimensions from previous calculations, we can start designing the concrete wall with the following steps:

1. To start the calculation, we need the given data of: diameter of the rebar for the reinforcement of concrete D; strength of concrete f_c'; yield strength of rebar f_y; thickness of the wall (specifically the thickness on the top of the wall) W
2. Factor of resistance must be checked first to make sure the dimension is correct.

$$K = \frac{M_u}{\phi b d^2}$$

$$K_{max} = \frac{382{,}5 \times \beta_1 \times f_c'(600 + f_y - 225 \times \beta_1)}{(600 + f_y)^2}$$

$$d = W - \frac{1}{2}D$$

Which K ≤ Kmax

In the case of retaining wall, b is the length of the wall. d is the effective width of concrete. If the condition of K is not met, the dimension of the retaining wall must be changed.

3. After the dimension is confirmed, the area of steel A_s will be calculated with the formula

$$A_s = \frac{0{,}85 \times f_c' \times a \times b}{f_y}$$

$$A_s = \rho_{min} \times b \times d$$

$$a = \left(1 - \sqrt{1 - \frac{2K}{0{,}85 f_c'}}\right) d$$

In this case, A_s with the highest value will be used for deciding the spacing of the steel reinforcements on the retaining wall.

4. It is needed to control the ratio of the steel reinforcements. The ratio ρ can be specified as maximum ratio of the steel reinforcements ρ_{max}, minimum ratio of the steel reinforcements ρ_{min} and ratio of the steel reinforcements ρ.

$$\rho_{max} = 0{,}75 \times \rho_b = \frac{382{,}5 \times \beta_1 \times f_c'}{(600 + f_y) \times f_y}$$

If fc' ≤ 31,36 MPa

$$\rho_{min} = \frac{1{,}4}{f_y}$$

If fc' > 31,36 MPa

$$\rho_{min} = \frac{\sqrt{f_c'}}{4f_y}$$

$$\rho = \frac{A_s}{bd}$$

Which $\rho_{min} \leq \rho \leq \rho_{max}$

5. Lastly, we are going to determine the total rebar used and also the spacing needed.

$$n = \frac{A_s}{\frac{1}{4}\pi D^2}$$

$$s = \frac{b}{n}$$

Which n = total number of rebar; s = spacing of the rebar

2.7 Summary of Construction Project Management

Construction project management is the application of planning, executing and control of a construction project. The application is done by using available resources efficiently and effectively in order to achieve a satisfying result.

There are a few elements in a construction project:

1. Material
2. Money
3. Manpower
4. Tools, machines and equipment
5. Method and mechanism of running a construction project

A project starts from ideas of someone we refer as the owner. These ideas from the owner are realized by engineering and management consultant in order to build the design by contractors.